A#23

Name _____

What if we aren't given the slant height?

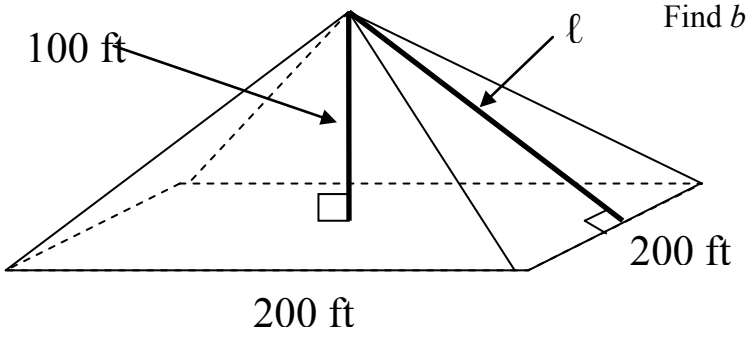

Find *b* first! Use Pythagorean Theorem to solve for *ℓ*

Find the Surface Area of the following Pyramids. Round to 2 decimal places

1)

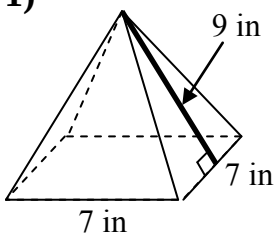

SA = _____

2)

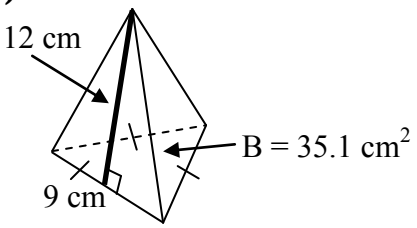

SA = _____

3) *(Hint: Draw and Find the Slant Height)*

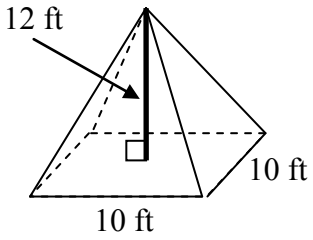

SA = _____

11-36 Find the volume and surface area of a square-based pyramid if the base edge has length 6 units and the height of the pyramid is 4 units.

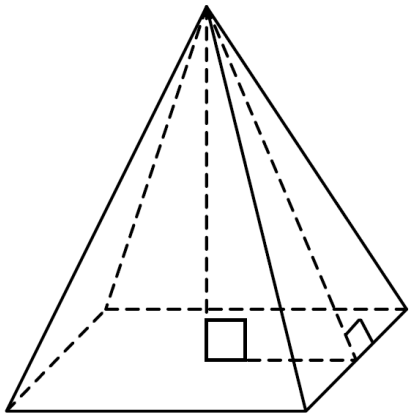

SA = _____ V = _____

Challenge! Find the volume and surface area of a pentagonal-based pyramid below.

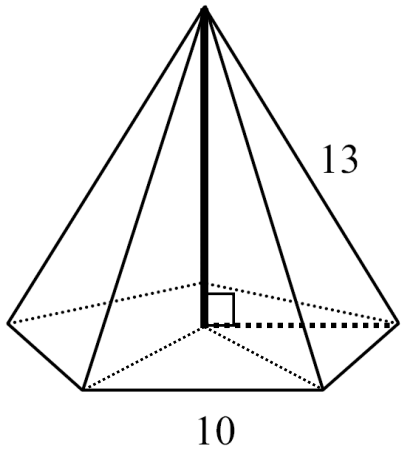

SA = _____ V = _____